PROTUTAKTNO POJAČALO SNAGE KLASE AB

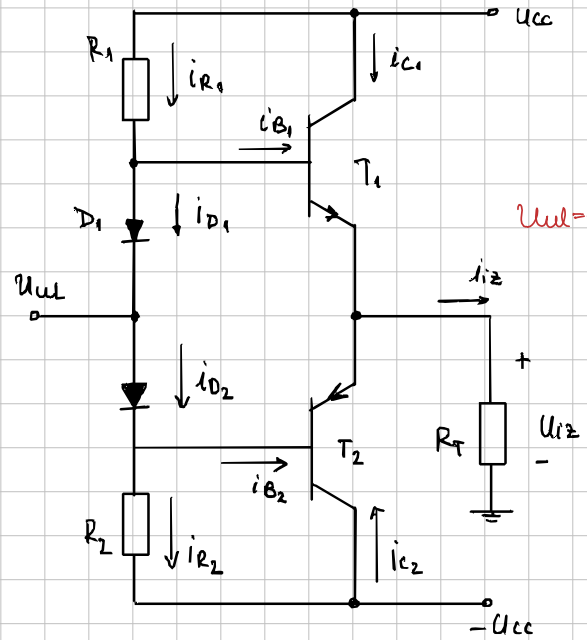

- diode postavljaju SRT tranz. u kolijena ul karakteristika
  - → izbjegnuta preskočna izobličenja
  - → stat. potrošnja snage u granama s diodama i tranzistorima

$U_{ul}=0 \rightarrow U_{iz}=0$

$U_{ul}>0$

$$U_{iz} = R_T \cdot i_{iz} = U_{ul} + U_{D1} - U_{BE1} \approx U_{ul}$$

→ modificirano pojačalo klase B

→ nema signala: $U_{D1} + U_{D2} \approx 2U_\gamma$

Ograničenje izlaznog napona

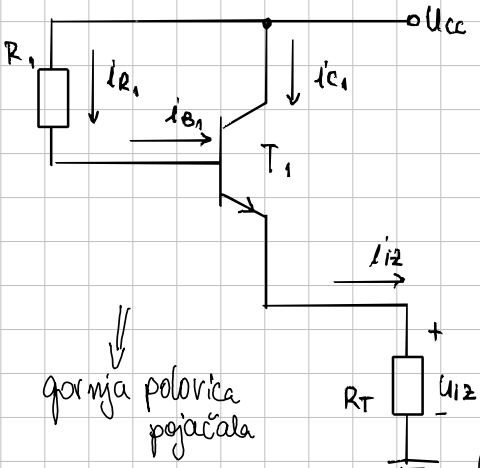

⇓ gornja polovica pojačala

$U_{ul} \uparrow \dashrightarrow i_{R1} \downarrow \dashrightarrow i_{B1} \downarrow \dashrightarrow i_{D1} \downarrow$

⟹ maks. izlazni napon ograničen prestankom vođenja diode

$$I_{izu\,max} = I_{Bmax} + I_{Cmax} = (1+\beta) I_{B\,max}$$

$$U_{CC} = R_1 \cdot I_{Bmax} + U_{BE} + (1+\beta) R_T \cdot I_{B\,max}$$

$$I_{Bmax} = \frac{U_{CC} - U_{BE}}{R_1 + (1+\beta) R_T}$$

$$U_{izu\,max} = R_T \, I_{izu\,max} = (U_{CC} - U_{BE}) \frac{(1+\beta) R_T}{R_1 + (1+\beta) R_T}$$

$$P_{RT} = R_T \frac{I_{izu}^2}{2} = \frac{U_{izu}^2}{2 R_T}$$

$$P_{RT,max} = R_T \frac{I_{izu\,max}^2}{2} = \frac{U_{iz,max}^2}{2 R_T}$$

Primjer 4.3.) Podesiti $R_1 = R_2 \longrightarrow U_{CC} = 15V \rightarrow P_{RT} = 5W$, $R_T = 8\Omega$

$I_{R_1} = ?$ $I_{R_2} = ?$ $\beta = 80$ $U_\gamma = 0{,}7V$

$I_{D_1} = ?$ $I_{D_2} = ?$

$$P_{RT} = \frac{R_T \cdot I_{izm}^2}{2} = \frac{U_{izm}^2}{2R_T}$$

$$U_{izm} = \sqrt{2R_T \cdot P_{RT}} = 8.94V \rightarrow \text{max amplituda izlaznog napona}$$

$$U_{izm} = (U_{CC} - U_{BE})(1+\beta)\frac{R_T}{R_1 + (1+\beta)R_T}$$

$$8.94 = (15 - 0.7) \cdot 81 \frac{8}{R_1 + 81 \cdot 8} \longrightarrow R_1 = 389\Omega$$

$$I_{RQ1} = \frac{U_{CC} - \overset{U_\gamma}{U_{D1}}}{R_1} = 36.76\,mA$$

$I_{RQ1} = I_{RQ2}$

Primjer 4.4.) $U_{CC} = 8V$ $R_E = 100\Omega$ $R_T = 8\Omega$ $\beta = 80$ $U_T = 25mV$

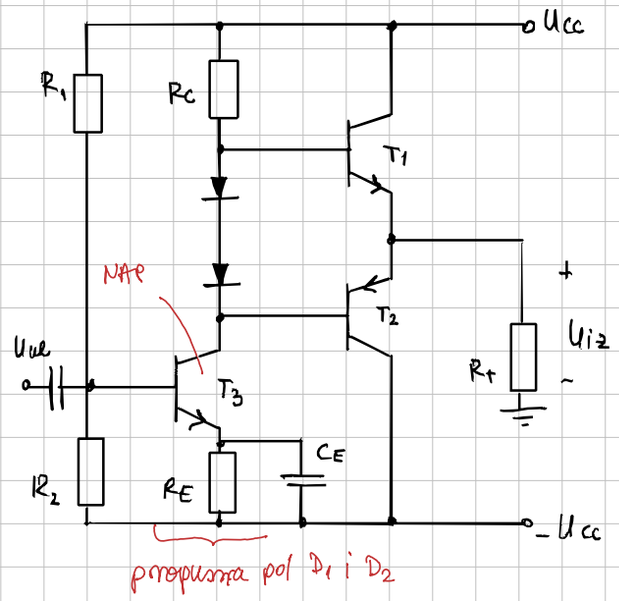

$R_1, R_2, R_C = ?$ $P_{RT_{max}} = 1W$

$U_{ul} = 0 \rightarrow U_{iz} = 0$

$I_{RQ_{1,2}} = 10 I_{BQ3}$

$U_{CE3\,zas} = 0{,}2V$

$$U_{izm} = \sqrt{2R_T \cdot P_{RT}} = 4V$$

$$U_{izm} = (U_{CC} - U_{BE1})(1+\beta)R_T \cdot \frac{1}{R_C + (1+\beta)R_T}$$

$$R_C = \dots = 535\Omega$$

$$I_{RCQ} = I_{CQ3} = (U_{CC} - \overset{U_\gamma}{U_{BE1}}) \cdot \frac{1}{R_C}$$ (kada ni napon na trošilu nije 0)

uz činjenicu: $I_{CQ3} >> I_{BQ3} \longrightarrow U_{BQ3} = -U_{CC} + R_E \cdot I_{CQ3} + U_{BEQ3}$

$= -5.94V$

$$I_{RQ_{1,2}} = 10 I_{BQ3} = \frac{10 \cdot I_{CQ3}}{\beta} = 1.7mA$$

$$\longrightarrow R_1 = \frac{U_{CC} - U_{BQ3}}{I_{RQ_{1,2}}} = 8.2k\Omega \qquad R_2 = \frac{U_{BQ3} + U_{CE}}{I_{RQ_{1,2}}} = 1{,}21k\Omega$$

<u>max amplituda poz i neg poluperiode:</u>

U_{izmax} (pozitivna poluperioda) $= \sqrt{2R_T P_{RT}} = 4V$

$U_{CE_3\,zas}$ (neg poluperioda)

$\longrightarrow$ zadnjih 15-10mV se mogu riješ

Tranzistori snage